Delta Rounded Back to Wall Toilet Suite

SKU: TMPL7383

Delta Rounded Back to Wall Toilet Suite is a porcelain back to wall toilet that pairs contemporary style with practical technology. Rimless technology and a nano glaze help maintain a hygienic bowl. A matte finish hides fingerprints and water spots, whilst a gloss surface creates a bright, elegant look that lifts a bathroom. The dual flush system helps reduce water use, and the soft close quick release seat adds quiet convenience. It's a durable, easy to live with and stylish option for modern family bathrooms.



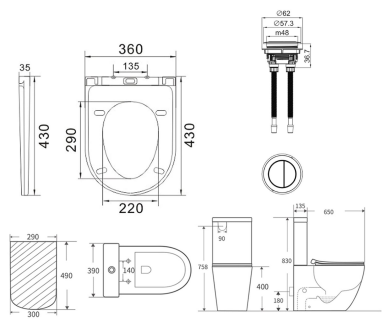

Dimensions & Weights	
Overall Size:	83cm H x 39cm W x 65cm D
Pan Size:	40cm H x 36cm W x 65cm D
Cistern Size:	43cm H x 39cm W x 13.5cm D
P Trap Setout:	180mm
S Trap Setout:	119-206mm
Back inlet Hole Height:	75.8cm
Overall Product Weight:	47.4 Kilograms

Features	
Type:	Toilet Suite
Toilet Type:	Back To Wall
Overheight Pan:	No
Colour:	White
Pan Shape:	Round
Full Flush:	4.5 L
Half Flush:	3.5 L
Average Flush:	3.3 L
Flush Mechanism:	Dual Flush
Toilet Material:	Porcelain
Seat Material:	Plastic
Seat Included:	Yes
Seat Type:	Standard
Seat Functions:	Soft Close; Quick Release Seat; Releasable
Rimless Technology:	Yes
Trap Type:	P-Trap
Inlet Position:	Universal Back or Bottom Inlet
Nano Glaze:	Yes
Box Contents:	1 x back to wall toilet suite
Product Care:	Gently brush the inner bowl with a toilet brush; wipe the toilet seat and exterior with a soft cloth; do not use steel wool or blades; do not flush non-flushables such as sanitary products, cotton swabs or excessive paper

Assembly	
Does This Require Assembly?:	Yes

Warranty	
Product Warranty:	3 Years

Specifications	
WELS Rating:	4 Star
WELS Registration Number:	LM05267
WELS Registration Expiry Date:	22/07/2027
WELS Model Name:	BL-102N-TPT
Flow Rate:	3.4L/m
WaterMark Certified:	Yes